BOARD LAYOUT

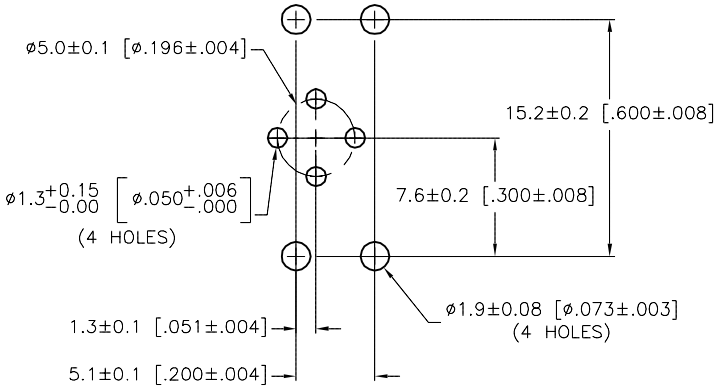

MALE END VIEW

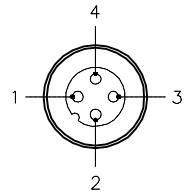

euro fast.

SPECIFICATIONS

CONTACT CARRIER MATERIAL/COLOR	NYLON OR TPU/YELLOW
CONTACT MATERIAL/PLATING	BRASS/GOLD
HOUSING, LOCKNUT MATERIAL/PLATING	BRASS/NICKEL
RATED CURRENT [A]	4.0 A
RATED VOLTAGE [V]	250 V
NUMBER OF CONDUCTORS [AWG]	PRINTED CIRCUIT PINS
TEMPERATURE RATING	−40°C to +80°C (−40°F to +176°F)
PROTECTION CLASS	MEETS NEMA 1,3,4,6P AND IEC IP68

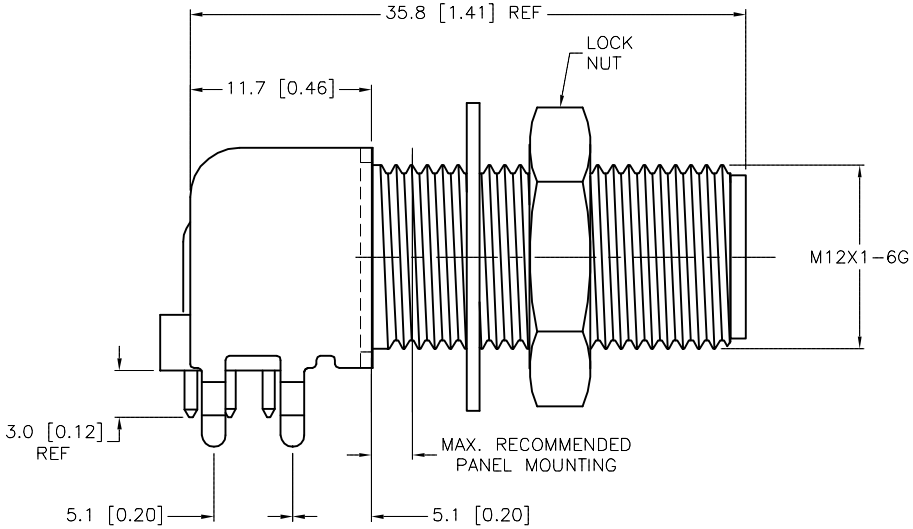

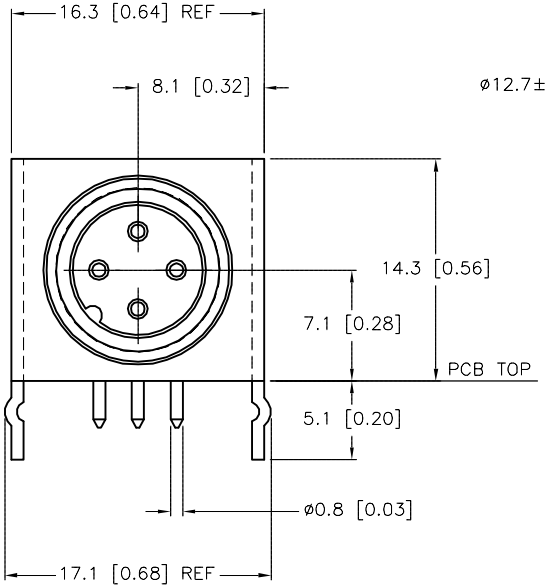

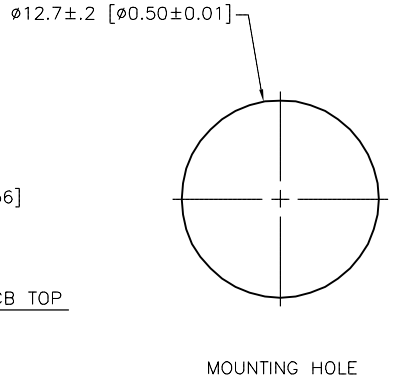

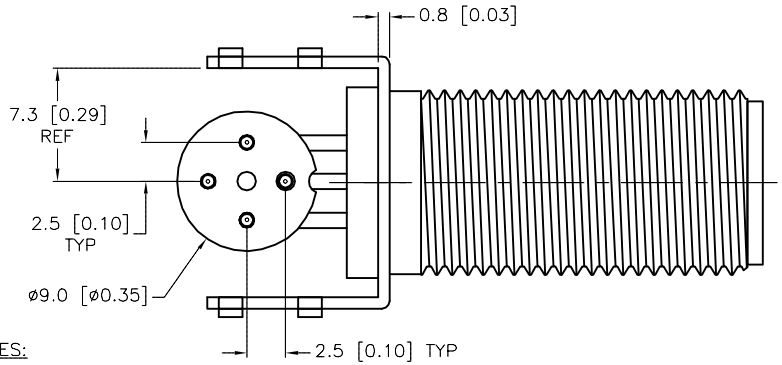

SOURCE DRAWING - FOR REFERENCE ONLY

NOTES:

1. DO NOT REMOVE PIN SPACER.
2. UNIT SNAP-FITS INTO 0.062 TO 0.125 THICK PC BOARDS.
3. "/S1070" DESIGNATES CONTACT CARRIER ROTATED 90° CLOCKWISE FROM NORMAL.

REV	DESCRIPTION	BY	DATE	ECO NO.
E	ADD TOELRANCE TO BOARD LAYOUT	RDS	03/28/19	69182

RELATED DOCUMENTS
1. INSERT SHEET 10240205
2.
3.
4.

3RD ANGLE PROJECTION

THIS DRAWING IS CONFIDENTIAL AND THE PROPERTY OF TURCK INC. USE OF THIS DOCUMENT WITHOUT WRITTEN PERMISSION IS PROHIBITED.

TURCK

3000 CAMPUS DRIVE
MINNEAPOLIS, MN 55441
1-800-544-7769
(763) 553-7300
(763) 553-0708 fax
www.turck.us

MATERIAL: SEE SPECIFICATIONS

FINISH: SEE SPECIFICATIONS

ALL DIMENSIONS DISPLAYED ON THIS DRAWING ARE FOR REFERENCE ONLY

CONTACT TURCK FOR MORE INFORMATION

DRFT: JBJ | DATE: 03/19/04
APVD: | SCALE: 2=1.0

UNIT OF MEASUREMENT
MILLIMETER [INCH]
DO NOT SCALE THIS DRAWING

DESCRIPTION: WFS 4.4-PCB/S1070

IDENTIFICATION NO.: U0967-66 | REV: E

FILE: U0967-66 | SHEET 1 OF 1

Approved 04/01/2019, work order #188370 by T.S.